SORELPOL

Jula item 014662

N7-202 ptd

VIN: S X E 1 P 2 0 2 D _ S 0 _ _ _ _ _
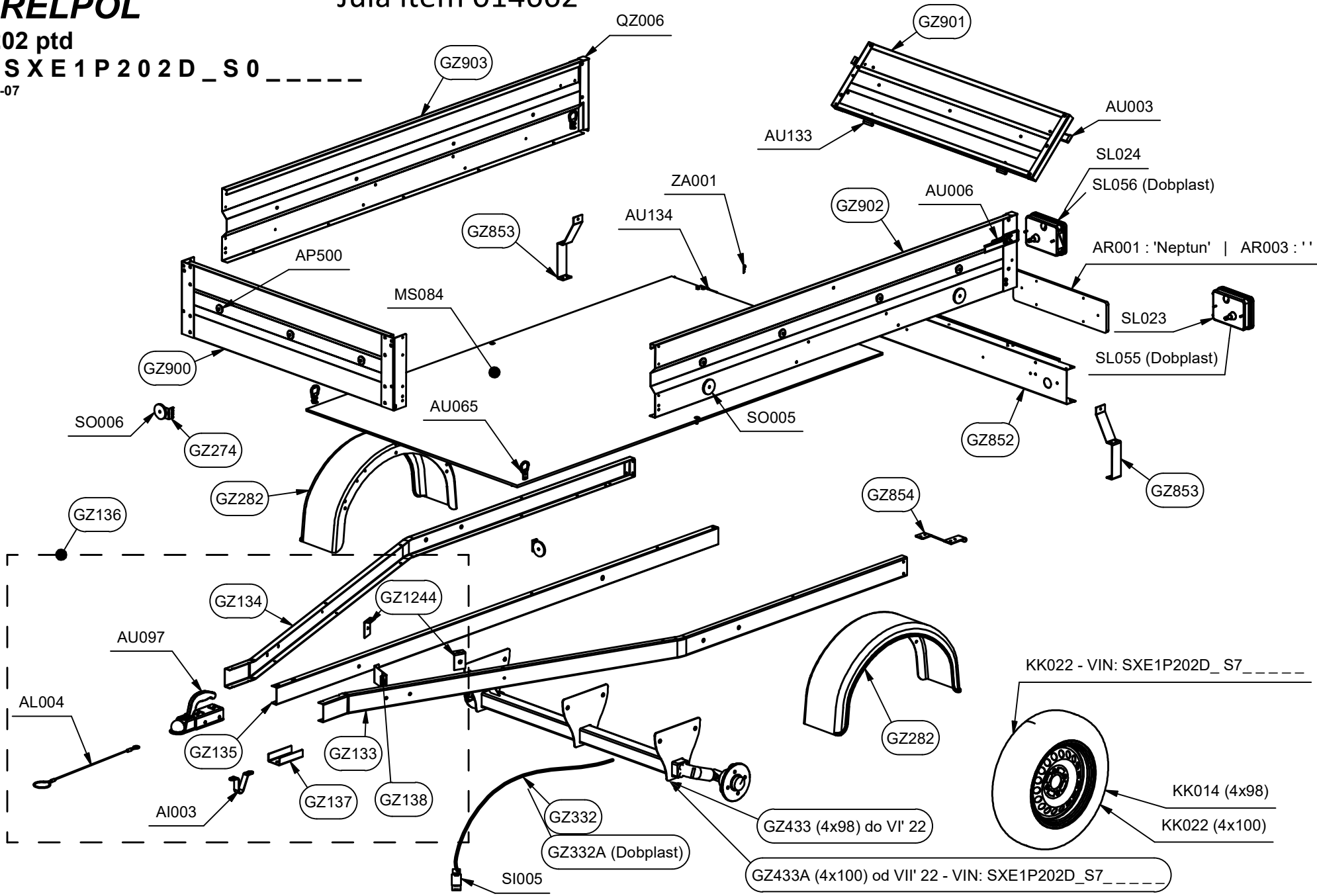
2022-12-07